BILL OF MATERIAL			
ITEM NO.	PART NUMBER	DESCRIPTION	NO. REQ'D
1	XXXXX	XXXXX	X

CONFIDENTIAL INFORMATION

THIS DRAWING AND ALL INFORMATION CONTAINED IN IT ARE THE PROPERTY OF APPLIED RECOVERY SYSTEMS, INC. AND MAY NOT BE REPRODUCED, DISCLOSED TO ANY OTHER PERSON OR USED IN ANY MANNER EXCEPT AS AUTHORIZED IN WRITING BY APPLIED RECOVERY SYSTEMS, INC.

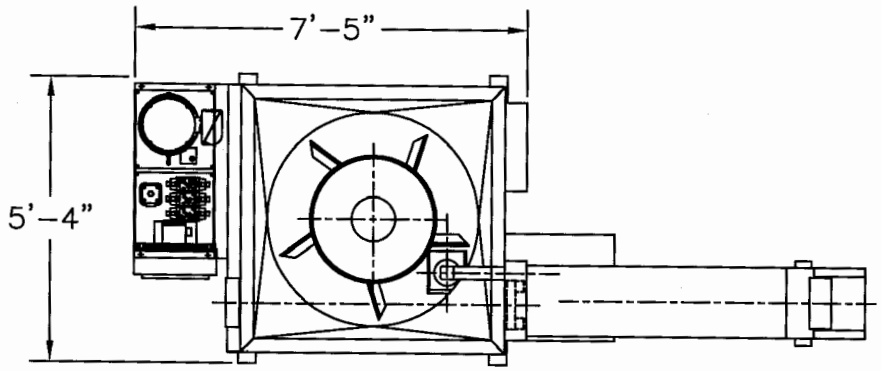

PRELIMINARY LAYOUT – NOT FOR PRODUCTION

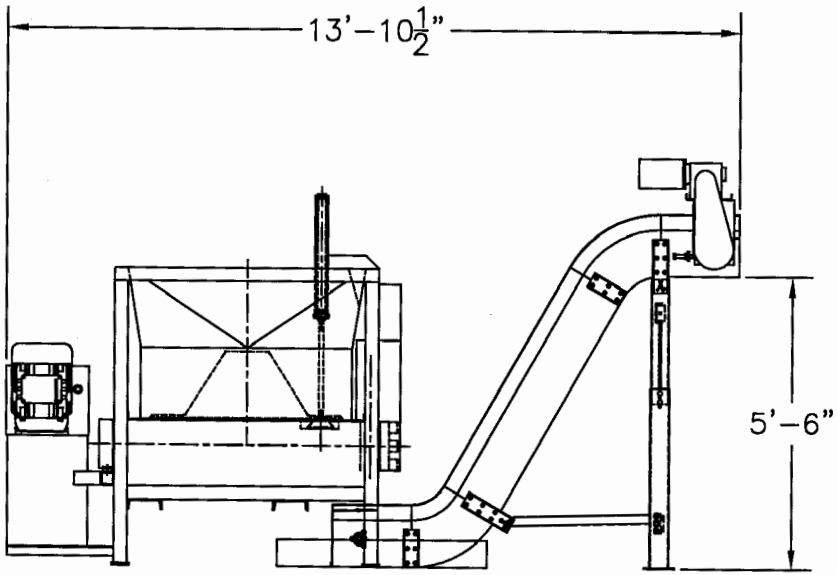

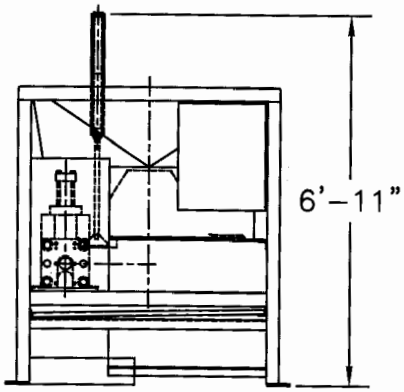

REVISION	E. N. NUMBER	DESCRIPTION	BY	DATE
X	X	X	XXX.	X
X	XXXXX	ORIGINAL RELEASE	XXX.	XXXXXX

TOLERANCES: DO NOT SCALE

APPLIED RECOVERY SYSTEMS

250 LAYOUT with Rear Feed